深 圳 市 永 连 旺 电 子 有 限 公 司
Shenzhen Yonglianwang Electronic CO.,LTD.

2.54mm Board Spacer, Dual Row, Right Angle

SPECIFICATIONS

Current Rating : 3AMP
Operation Temperature: -40° C to+105° C
Contact Resistance : 20mΩ Max.
Insulation Resistance: 1000MΩ Min.
Withstanding Voltage : AC 1000V
Insulator Material : Polyester (UL94V-0)
Standard: PBT
Contact Material : Brass
Contact plating : Au or Sn over 50u" Ni

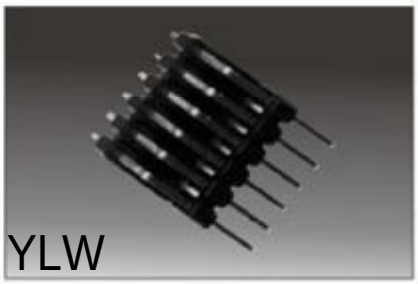

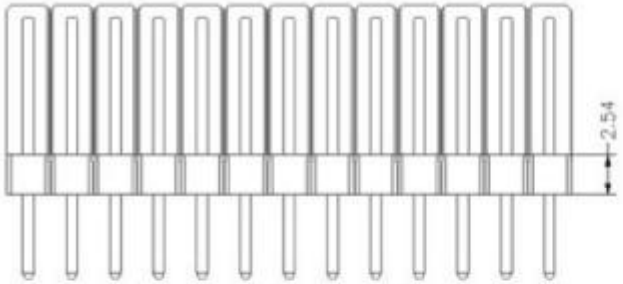

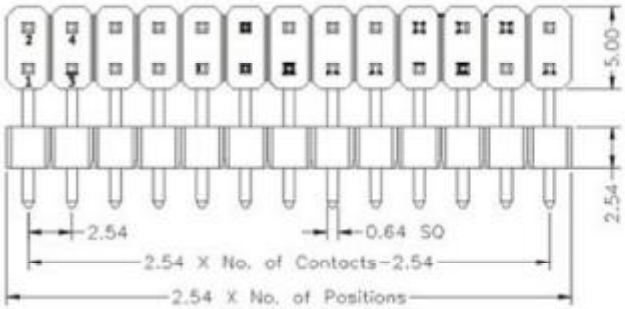

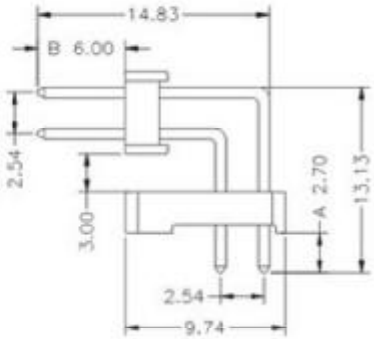

PCB LAYOUT

Ordering Information

1 1 25 — 2 2 XX G0 R XXX 01

No. of Pins Per Row	Contact Plating	Pin Length
01~40	SN : Tin G0 : Gold Flash G2 : 5u" Gold G3 : 10u" Gold G4 : 15u" Gold G5 : 30u" Gold S0 : Gold Flash/Tin Standard: G0	XXX: Custom Length Available

Tel:86-0755-27367782 Fax:86-0755-27382610
Http://www.szyLconn.com E-mail:sales@szyLconn.com
地址:广东省深圳市宝安区福永街道兴围第一工业区兴华路北第17幢