深 圳 市 永 连 旺 电 子 有 限 公 司
Shenzhen Yonglianwang Electronic CO.,LTD.

2.54mm Female Header, Single/Dual Row, Straight

SPECIFICATIONS

Current Rating : 3AMP
Operation Temperature: -40° C to+105° C
Contact Resistance : 20mΩ Max.
Insulation Resistance: 1000MΩ Min.
Withstanding Voltage : AC 1000V
Insulator Material : Polyester (UL94V-0)
Standard: PBT
Contact Material : Phosphor bronze
Contact plating : Au or Sn over 50u" Ni

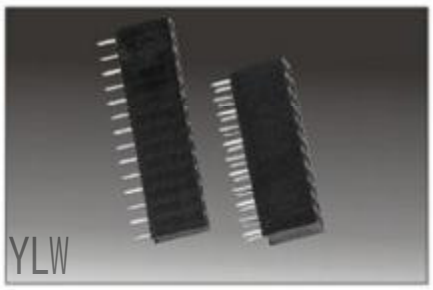

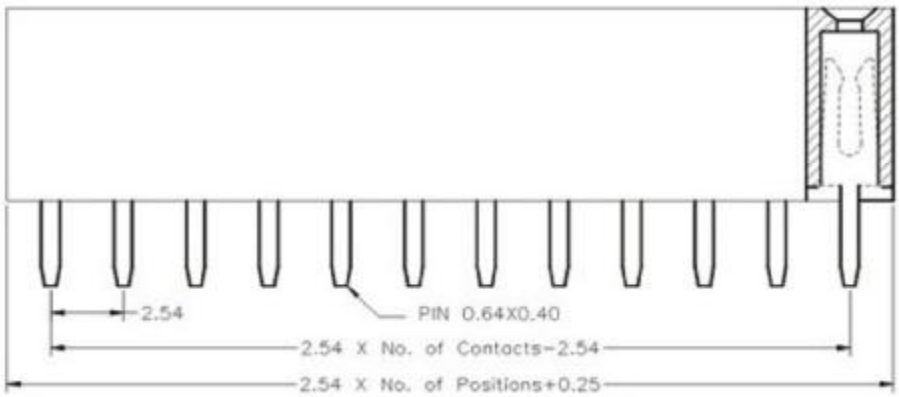

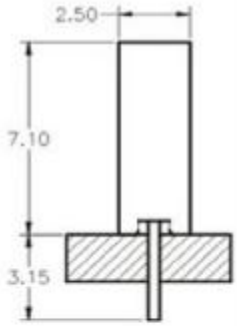

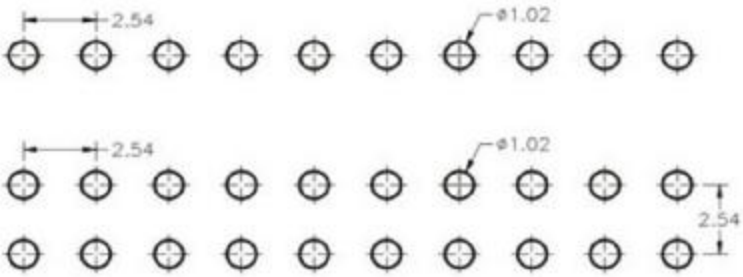

PCB LAYOUT

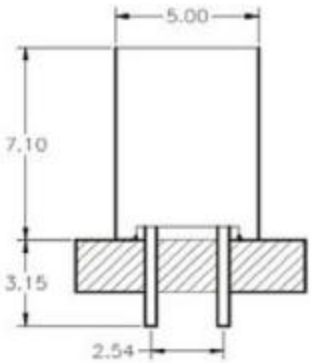

Ordering Information

2 1 71 — 2 XX S G0 A Y N 01

No. of Rows	No. of Pins Per Row	Contact Plating	Material Type
1=Single Row 2=Dual Row	02~40	SN : Tin G0 : Gold Flash G2 : 5u" Gold G3 : 10u" Gold G4 : 15u" Gold G5 : 30u" Gold S0 : Gold Flash/Tin Standard: G0	A: PBT B: Nylon-66 C: Nylon-6T D: LCP

Tel:86-0755-27367782 Fax:86-0755-27382610
Http://www.szyLconn.com E-mail:sales@szyLconn.com
地址:广东省深圳市宝安区福永街道兴围第一工业区兴华路北第17幢